Download
the hOn
Smart-Home App.

hOn

HOOVER

EN

Thank you for purchasing a Hoover Product.

Please read these instructions carefully before using this appliance. The instructions contain important information which will help you get the best out of the appliance and ensure safe and proper installation, use and maintenance.

Keep this manual in a convenient place so you can always refer to it for the safe and proper use of the appliance.

If you sell the appliance, give it away, or leave it behind when you move house, make sure you also pass on this manual so that the new owner can become familiar with the appliance and safety warnings.

Legend

Warning - Important Safety information

General information and tips

Environmental information

NOTE:FOR U.K. ONLY
On receipt of your appliance please check it carefully for damage. Any damage found must be reported to the delivery driver immediately. Alternatively damage found must be reported to the retailer within 2 days of receipt.

Environmental conditions

This appliance is marked according to the European directive 2012/19/EU on Waste Electrical and Electronic Equipment (WEEE).

WEEE contains both polluting substances (which can cause negative consequences for the environment) and basic components (which can be re-used). It is important to have WEEE subjected to specific treatments, in order to remove and dispose properly all pollutants, and recover and recycle all materials. Individuals can play an important role in ensuring that WEEE does not become an environmental issue; it is essential to follow some basic rules:

- WEEE should not be treated as household waste;
- WEEE should be handed over to the relevant collection points managed by the municipality or by registered companies. In many countries, for large WEEE, home collection could be present.

In many countries, when you buy a new appliance, the old one may be returned to the retailer who has to collect it free of charge on a one-to-one basis, as long as the equipment is of equivalent type and has the same functions as the supplied equipment.

WARNING!

Risk of injury or suffocation!
Disconnect the appliance from the mains supply. Cut o the mains cable and dispose of it. Remove the door catch to prevent children and pets to get closed in the appliance.

Content

1- Safety information 4
2- Installation 7
3- Practical hints 11
4- Product description 13
5- Control panel 14
6- Programmes 17
7- Consumption 20
8- Daily use 25
9- hOn App 27
10 - Care and cleaning 30
11- Troubleshooting 33
12- Technical data 34
13- Customer service 35

1-Safety information

Before switching on the appliance for the first time read the following safety hints!

WARNING!

Daily use

- This appliance is intended to be used in household and similar applications such as:
  - Staff kitchen areas in shops,offices and other working environments;
  - Farm houses;
  - By clients in hotels, motels and other residential type environments;
  - Bed and breakfast type environments.

  A different use of this appliance from household environment or from typical housekeeping functions, as commercial use by expert or trained users, is excluded even in the above applications. If the appliance is used in a manner inconsistent with this it may reduce the life of the appliance and may void the manufacturer's warranty. Any damage to the appliance or other damage or loss arising through use that is not consistent with domestic or household use (even if located in a domestic or household environment) shall not be accepted by the manufacturer to the fullest extent permitted by law.
- This appliance can be used by children aged from 8 years and above and persons with reduced physical, sensory or mental capabilities or lack of experience and knowledge if they have been given supervision or instruction concerning use of the appliance in a safe way and understand the hazards involved.

  Children shall not play with the appliance.Cleaning and user maintenance shall not be made by children without supervision.
- Children should be supervised to ensure that they do not play with the appliance.
- Children of less than 3 years should be kept away unless continuously supervised.
- If the supply cord is damaged, it must be replaced by a special cord or assembly available from the manufacturer or its service agent.

- Only use the hose-sets supplied with the appliance for the water supply connection (do not reuse old hose-sets).
- Water pressure must be between 0.03 MPa and 1 MPa.
- Make sure carpets or rugs do not obstruct the base or any of the ventilation openings.
- After installation, the appliance must be positioned so that the plug is accessible.
- The maximum load capacity of dry clothes depends on the model used (see control panel).
- To consult the product technical specification please refer to the manufacturer website.

Electrical connections and safety instructions

- The technical details (supply voltage and power input) are indicated on the product rating plate.
- Make sure that the electrical system is earthed, complies with all applicable law and that the (electricity) socket is compatible with the plug of the appliance.Otherwise,seek qualified professional assistance.
- The use of converters,multiple sockets or extension cords is strongly advised against.
- Before cleaning or maintaining the washing machine,unplug the appliance and turn off the water tap.
- Do not pull on the power cord or appliance to unplug the machine.
- Make sure there is no water in the drum before opening the door.

WARNING!

Water may reach very high temperatures during the wash cycle.

- Do not expose the washing machine to rain, direct sunlight or other weather elements. Protect from possible freezing.
- When moving,do not lift the washing maching by the knobs or detergent drawer;during transport,never rest the door on the trolley.
  We recommend two people lift the washing machine.
- In the event of fault and/or malfunction, turn off the washing machine, close the water tap and do not tamper with the appliance.
  Immediately contact the customer service centre and only use original spare parts.Failure to observe these instruction may jeopardise appliance safety.

Intended use

This appliance is intended for washing machine-washable laundry only. Anytime follow the instructions given on the label of each garment label. It is designed exclusively for domestic use inside the house. It is not intended for commercial or industrial use.
Changes or modifications to the device are not allowed. Unintended use may cause hazards and loss of all warranty and liability claims.

2.1 Preparation

- Make sure there is no transport damage.
- Make sure all transport bolts are removed.
- Handle the appliance always with at least two persons because it is heavy.
- Take the appliance out of the packaging.
- Remove all packaging material including protecting film on cabinet, polystyrene base, keep them out of children reach. While opening the package, water drops may be seen on plastic bag and porthole. This normal phenomenon results from water tests in the factory.

Note: Packaging disposal

Keep all packaging materials out of children's reach and dispose them in an environmentally friendly manner.

2.2 OPTIONAL: Install noise reduction pads

1. When opening the shrink package, you will find four noise reduction pads. These are used for reducing noise (Fig. 2-1).
2. Lay the washing machine down to its side, porthole pointing upwards, bottom side towards operator.
3. Take out the noise reduction pads and remove the double-sided adhesive protective film; paste around the bottom; the noise reduction pads under the washing machine cabinet as shown in Figure 3 (two longer pads in position 1 and 3, two shorter pads in position 2 and 4). Finally set the machine upright again.

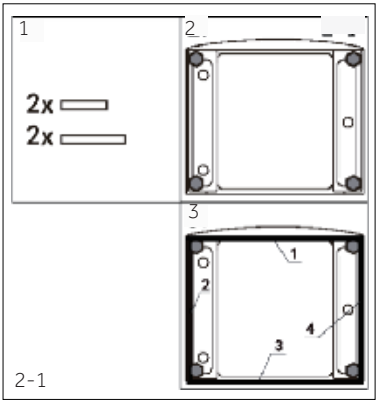

2-1

2.3 Dismantle the transportation bolts

The transport protection on the rear side is designed for clamping anti-vibration components inside the appliance during transportation to prevent inner damage. All elements (T1,T2,T3 and T4, Fig 2-2) must be removed before use.

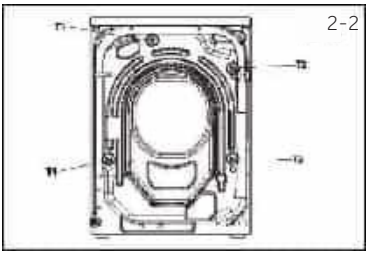
2-2

1. Remove all 4 packing bolts (T1-T4) (Fig.2-3).
2. Fill the 5 holes with blanking plugs.

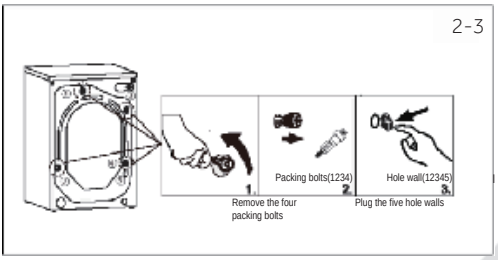

2-3

Note: Keep in safe place

Keep all parts of the transport protection in a safe place for later use. Whenever the appliance is to be moved at first reinstall the protection parts.

2.4 Moving the appliance

If the machine is to be moved to a distant location, replace the transportation bolts removed before installation to prevent damage: The assembly takes place in reverse order.

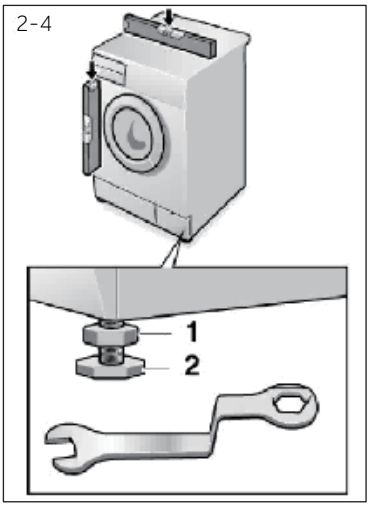

2.5 Aligning the appliance

Adjust all feet (Fig.2-4) to achieve a complete level position. This will minimize vibrations and thus noise during use. It will also reduce wear and tear. We recommend to use a spirit level for adjustment. Floor should be as stable and flat as possible.

1. Loose the locknut (1) by using a wrench.
2. Adjust the height by turning the feets.(2).
3. Tighten locknut (1) against the housing.

2.6 Aligning the appliance

Fix the water drain hose properly to the piping. The hose has to reach at one point a height between 80 and 100 cm above the appliance bottom line! if possible keep always drain hose fixed to the clip at the appliance back.

WARNING!

- Use only the supplied hose set for the connection.
- Never reuse old hose sets!
- Only connect to cold water supply.
- Before connection, check whether the water is clean and clear.

Following connections are possible:

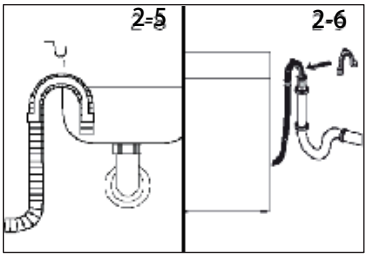

2.6.1 Drain hose to sink

- Hang the drain hose with the U-support over the edge of a sink with adequate size (Fig. 2-5).
- Protect the U-support sufficiently against slipping.

2.6.2 Drain hose to waste water connection

- The internal diameter of the stand pipe with vent-hole must be minimum 40 mm.
- Put the drain hose for 80-100 mm in the wastewater pipe.
- Attach the U-support and secure it sufficiently (Fig. 2-6).

2.6.3 Drain hose to sink connection

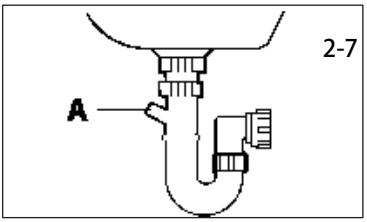

- The junction must lie above the siphon.
- A spigot connection is usually closed by a pad (A). That must be removed to prevent any disfunction (Fig. 2-7) .
- Secure the drain hose with a clamp.

CAUTION!

- The drain hose should not be submerged in water and should be securely fixed and leak-free. If the drain hose is placed on the ground or if the pipe is at a height of less than 80 cm, the washing machine will continuously drain while being filled (self-siphoning).
- Drain hose is not to be extended. If necessary contact after sales service.
- Do not remove the drainage pipe clamp.

2.7 Drain hose to sink connection

Make sure that the gaskets are inserted.

1. Connect the water inlet hose with the angled end to the appliance (Fig.2-8).Tighten the screw Joint by hand.
2. The other end connects to a water tap with a 3/4 thread (Fig.2-9).

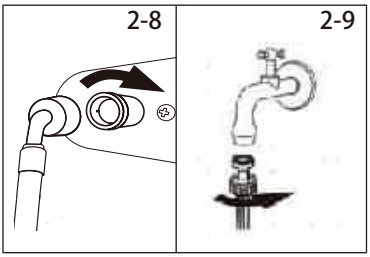

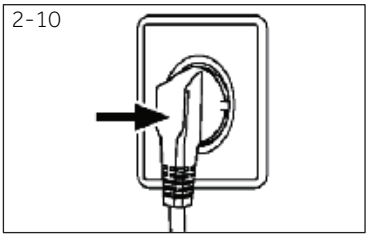

2.8 Electrical Connection

Before each connection check if:

- power supply, socket and fusing are appropriate to the rating plate.
- the power socket is earthed and no multi-plug or extension are used.
- the power plug and socket are strictly according.
- **Only UK:** The UK plug meets BS1363A standard.

Put the plug into the socket (Fig. 2-10).

WARNING!

- Ensure always that all connections (power supply, drain and fresh water hose) are film, dry and leack free!
- Take care these parts are never to be crushed, kinked, or twisted.
- If the supply cord is damaged, it must be replaced by the service agent (see warranty card) in order to avoid a hazard.

3.1 Load tips

When sorting laundry, make sure:
- have eliminated metallic objects such as hair clips, pins, coins, from laundry;
- to have buttoned pillow cases, closed zips, tied loose belts and long robe ribbons;
- to have removed rollers, hooks or clips from curtains;
- to have carefully read clothing washing labels;
- to have removed any persistent stains using specific detergents.

▶ When washing rugs, bedcovers or other heavy clothing, we recommend you avoid the spinning cycle.
▶ To wash wool, make sure the item can be machine washed. Check the fabric label.
▶ Leave the appliance's door slightly open between washes, to prevent possible bad smells developing inside the machine.

3.2 Useful advice for saving

Tips on how to save money and not damage the environment when using your appliance.
▶ Load the machine with suggested capacity shown in the programme table for each programme - this will allow you to save energy and water.
▶ Noise and residual laundry moisture are affected by spin speed: a faster spin is associated with greater noise and lower residual moisture in the laundry.
▶ The most efficient programmes in terms of combined use of water and energy are usually the longer-lasting ones with lower temperature.
▶ Scan QR code on energy label for energy consumption information. The actual energy consumption may differ from the declared one according to local conditions.

Maximise the load size

▶ Achieve the best use of energy,water,detergent and time by using the recommended mximum load size.
Save up to 50% energy by washing a full load instead of 2 half loads.

Do you need to pre-wash?

▶ For heavily soiled laundry only!
Save detergent, time, water and energy consumption by not selecting prewash for slight to normally soiled laundry.

Is a hot wash required?

▶ Pretreat stains with stain remover or soak dried in stains in water before washing to reduce the necessity of a hot wash programme.Save energy by using a low temperature wash programme.

3.3 Dosing the detergent

Below is a short guide with tips and advice on the use of detergent
▶ Only use detergents suitable for washing machine.
▶ Select your detergent according to the type of fabric (cotton, delicates, synthetics, wool, silk, etc.), the colour, the type and level of soiling and the programmed washing temperature.
▶ To use the right amount of detergent, softener or any other additives, carefully follow

the manufacturer's instructions every time: correctly using the appliance with the right dose allow you to avoid waste and to reduce the environmental impact.

When washing heavily soiled whites , we recommend using cotton programs of 60°C or above and a normal washing powder (heavy duty) that contains bleaching agents that at medium/high temperatures provide excellent results.
For washes between 40°C and 60°C the type of detergent used needs to be appropriate for the type of fabric and level of soiling. Normal powders are suitable for "white" or colour fast fabrics with high soiling, while liquid detergents or "colour protecting" powders are suitable for coloured fabrics with light levels of soiling.
For washing at temperatures below 40°C, we recommend the use of liquid detergents or detergents specifically labeled as suitable for low temperature washing.
For washing wool or silk, only use detergents specifically formulated for these fabrics.

▶ Too much detergent leads to excessive foam, which prevents the cycle being carried out correctly. It could also affect the quality of the washing and rinsing.

The use of ecological detergents without phosphates may cause the following effects:
- **cloudier rinse drain water:** This effect is tied to the suspended zeolites which do not have negative effects on rinse efficiency.
- **white powder (zeolites) on laundry at the end of the wash:** this is normal, the powder is not absorbed by fabric and does not change its colour.
  To remove the zeolites, select a rinse programme. In the future consider using slightly less detergent.
- **foam in the water at last rinse:** this does not necessary indicate poor rinsing. Consider using less detergent in future washes.
- **abundant foam:** This is often due to the anionic surfactants found in the detergents which are hard to eliminate from laundry.
  In this case, do not re-rinse to eliminate these effects. It is invalid.
  We suggest conducting a maintenance wash using a proprietary cleaner.

If the problem persists or if you suspect a malfunction, immediately contact an Authorised Customer Service Centre.

Note:

Due to technical changes and different models,the illustrations in the following chapters may differ from your model.

4.1 Picture of appliance

Front (Fig. 4-1):

4-1

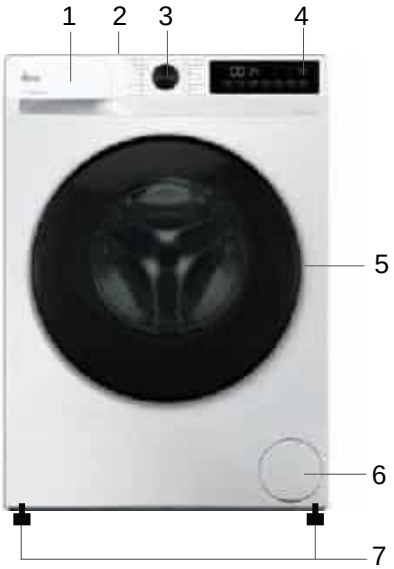

1 Detergent / Softener drawer
2 Work top
3 Programme selector
4 Panel
5 Washer door
6 Filter door
7 Adjustable feet

Rear side (Fig. 4-2):

4-2

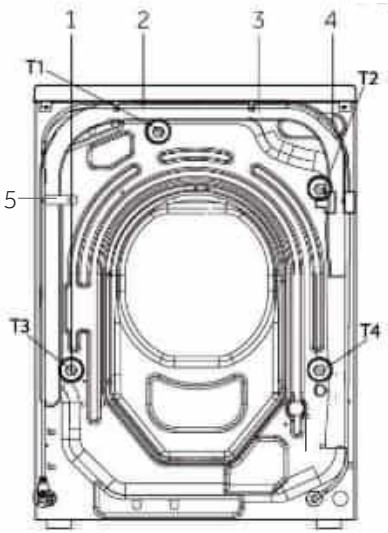

1 Transportation bolts (T1-T4)
2 Power cord
3 Drain hose
4 Water inlet valve
5 Drainage hose clamp

4.2 Accessories

Check the accessories and literature in accordance with this list (Fig. 4-3):

4-3

Inlet hose-assembly | 5 Blanking plugs | Drain hose bracket | Noise reduction pads | Warranty card | User manual | Energy label | 10 years parts guarantee | Simple operation instruction sticker

5-Control panel

5-1

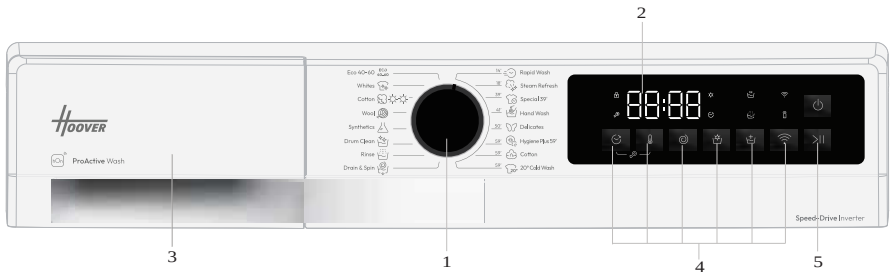

1 Programme selector
2 Display
3 Detergent /Softener drawer
4 Function buttons
5 "Start/Pause" button

Note: Acoustic signal

The acoustic signal can be selected or canceled if necessary;see DAILY USE (see P27 8.12).

5-2

5.1 Power button

Turn on/ off the machine through this power button (Fig.5-2).

5-3

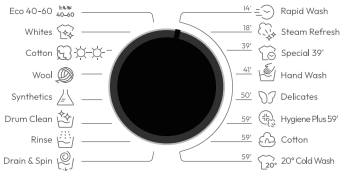

5.2 Programme selector

By turning the knob (Fig.5-3) one of 16 programmes can be selected,its default settings will be displayed.

5-4

5.3 Display

The display (Fig.5-4) shows following information:

- Program name
- Remaining time
- Reservation remaining time
- Alarm information and prompt information
- Pause end information
- Delay time

5.4 Detergent drawer

Open dispenser drawer, the following components can be seen (Fig. 5-5):
1: Compartment for powder or liquid detergent.
2: Detergent flap selector,lift it up for powder detergent, keep it down for liquid detergent.
3: Put a small amount of washing powder.
4: Compartment for softener.
5: Lock tab, press it down to pull out dispenser drawer.
The recommendation on the type of detergents is suitable for the various washing temperatures, please refer to the manual of detergent (see P25).

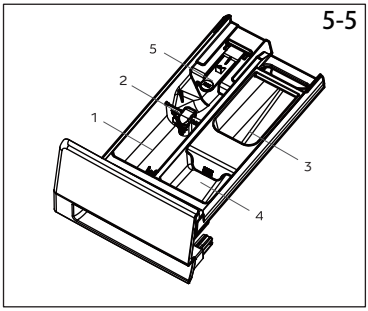

5.5 Function buttons

The function buttons (Fig. 5-6) enable additional options in the selected programme before programme starts. The related indicators are displayed.
By switching off the appliance or setting a new programme,all options are displayed.
If a button has multiple options, the desired option can be selected by pressing the button sequentially.
By touching the buttons, when it is in dull light, the function is unselected; when it is in bright light, the function is selected.

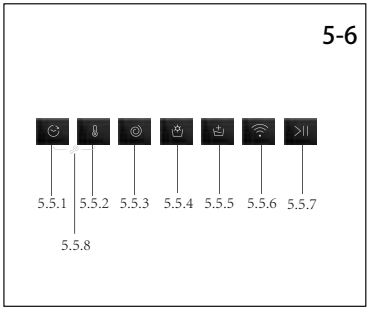

Note: Factory settings

To get best results in each programme,Candy has defined specific default settings.
If there is no special requirement, default setting are recommended.

5.5.1 Function button "⏲"

- This delay button allows you to preprogramme the wash cycle to with a maximum of 24 hours delay.(Fig.5-7)
- To delay the start using the following procedures:
  - Select the required programme.
  - Press the button once to activated the delay start and then press it again to set the desired delay.The delay increases in steps of 30 minutes,with a maximum of 24 hours delay.
  - Confirm by pressing the "Start/Pause" button. The delay countdown begin and when it has finished, the programme will start automatically.
- It is possible to cancel the delay start by turning the programme selector.

5.5.2 Function button " 🌡 "

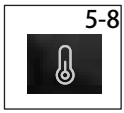

- Touch this temperature button(Fig.5-8) to display the corresponding temperature. If "-- ℃" is selected, the water will not be heated.

5-9

5.5.3 Function button "◎"

- Touch this speed button (Fig.5-9) to change or deselect the spin speed of the program. If no light is illuminated and display " 0 ", the appliance will not spin.

5-10

5.5.4 Function button "☼"

- This button (Fig.5-1.) to select the drying function.
  Continuous pressing can select different drying intensities and times.
  This button can only be selected by some programs,
  and cannot be selected when the program light is off.

5-11

5.5.5 Function button "+"

- This button is extra rinse(Fig.5-11). It allows you to add at least one rinse at the end of washing cycle.(Some programmes do not have this function.) It is useful for people with delicate and sensitive skin, for which a small amount of residue may cause allergies. It is advisable to use this program for children clothes and for the washing of heavily soiled items, which require a whose fibre large amount of detergent or for the washing of toweling items, have the tendency to hold the detergent.

5-12

5.5.6 Function button "⌔"

- Shortly press this button to activate/deactivate the Remote Control of the appliance via the hOn App(Fig.5-12)

NOTE: To start the pairing procedure, please follow the App instructions.
More informations, please see the dedicated "hOn App" chapter 9.

5-13

5.5.7 Function button ">||"

- Touch this button (Fig.5-13) gently to start or interrupt the currently displayed programme.

5-14

5.5.8 Function button "🔑"

- Press the “Delay” and “Temperature” button (Fig.5-14) simultaneously to activate the child lock mode.

6-Programmes

● Yes
○ Optional
/ No

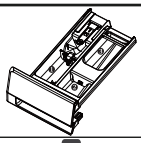

Detergent compartment for:
❶ Detegent
❷ Softener or care product
❸ Prewash

√ Selectable but not default
× Not selectable
— default

		Washing MAX KG 7 KG	8 KG	9 KG	10 KG	Drying 4 KG	5 KG	6 KG	STD TEMP	MAX TEMP	PRESET SPIN	MAX SPIN	1	2	3	QUICK WASH	DRY	EXTRA RINSE	DELAY
ECO 40-60	ECO40-60	7	8	9	10	4	5	6	40	90	1400	1400	●	○	/	√	√	√	√
	WHITES	4.5	5	6	7	2	2.5	3	30	60	1000	1000	●	○	/	√	√	√	√
	COTTON	-	-	-	-	4	5	6	/	/	/	/	/	/	/	×	√	×	×
	WOOL	-	-	-	-	0.4	0.4	0.4	/	/	/	/	/	/	/	×	×	×	×
	SYNTHETICS	4.5	5.5	6	7	2.5	3.5	4	40	60	1200	1200	●	○	/	√	√	√	√
	DRUM CLEAN	-	-	-	-	-	-	-	90	90	-	-	/	/	/	×	×	×	×
	RINSE	7	8	9	10	4	5	6	-	-	1000	1000	/	○	/	×	√	×	×
	DRAIN&SPIN	7	8	9	10	4	5	6	-	-	1000	1400	/	/	/	×	√	×	×
	RAPID WASH	1	1	1	1	1	1	1	30	30	800	1400	●	○	/	×	√	√	√
	STEAM REFRESH	1	1	1	1	-	-	-	-	-	-	-	/	/	/	×	×	×	×
	SPECIAL 39'	1	1.5	1.5	2	1	1	1	30	30	800	1400	●	○	/	×	√	√	√
	HAND WASH	1.5	2	2	2.5	-	-	-	30	60	800	800	●	○	/	×	×	√	√
	DELICATES	1.5	2	2	2.5	-	-	-	30	40	400	400	●	○	/	×	×	×	√
	HYGIENE PLUS 59'	1	1.5	1.5	2	1	1	1	60	90	1400	1400	●	○	/	√1)	√	×	√
	COTTON	7	8	9	10	4	5	6	30	90	1400	1400	●	○	/	√	√	√	√
20°	20° COLD WASH	7	8	9	10	4	5	6	20	20	1000	1000	●	○	/	√	√	√	√

INFORMATION FOR THE TEST LABORATORIES

STANDARD PROGRAMME ACCODING TO(EU)No 2019/2023:ECO 40-60 PROGRAMME

1)Not selectable at the default temperature, but selectable after altering the temperature.

Description of programmes

To clean different types of fabrics and various levels of dirt, the washing machine has specific programs to meet every need of washing (see table of programmes).

Choose programme in accordance with the laundry instructions appearing on labels, especially the maximum recommended temperature.

WARNING!

IMPORTANT WASH PERFORMANCE ADVICE.

- New, coloured garments should be washed separately for at least 5 or 6 washes.
- Certain large dark items such as jeans and towels should always be washed separately.
- Never mix NON COLOURFAST fabrics.
- Do not touch the observe window glass when the high temperature program is operating.

ECO 40-60

The ECO 40-60 programme is able to clean normally dirty cotton laundry declared to be washable at 40°C to 60°C, together in the same cycle. This programme is used to assess the compliance with the EU Ecodesign legislation(environmentally friendly products design).

WHITES

This programme is suitable for washing large clothes that are not too dirty, which can help wash more clothes.

COTTON

High temperature drying programme recommended for cottons and linen items (always refer to the laundry care label).

WOOL

Low temperature drying programme, ideal to dry woollen clothes with maximum care and softness, reducing rubbing of fabrics related to the amount of the washing and the spin speed selected for the wash. The cycle is suitable for small loads up to 0.4 kg (1 sweater).

SYNTHETICS

This programme allows you to wash different fabrics and different colours all together.The rotation movement of the drum and the water levels are optimized, both during the washing rinsing phase. The accurate spin action ensures a reduced formation of creases in the fabrics.

DRUM CLEAN

This program can carry out the self-cleaning of the washing machine. We recommend a bucket self-cleaning after using the washing machine for 50 times. When using this program, please do not use any clothes detergent or machine cleaner.

RINSE

This program performs 2 rinses with an intermediate spin (which can be reduced or excluded by using the appropriate button). It is used for rinsing any type of fabric, for example after a wash carried out by hand.

DRAIN&SPIN
The program completes the drain and a maximum spin. It is possible to delete or reduce the spin through the spin selection button.

RAPID WASH
This new programme may be used to obtain excellent results while saving water, energy, detergent and time. This option washes at a medium temperature suitable for lightly dirty mixed laundry of cotton and synthetic. Recommended for small loads and lightly dirty items.

STEAM REFRESH
This programme uses a steam treatment to relax creases. It is designed for dry graments and depending on the type of fabrics.

SPECIAL 39'
This programme allows you to wash different fabrics together suc h as cuttons, synthetics and mixed fabrics in only 39 minutes at 30°C (or less) temperature. This programme is particularly suited to slightly dirty fabrics, up to half of nominal load.

HAND WASH
This programme performs a wash cycle dedicated to the delicate fabrics that can be washed by the washing machine, the articles to be washed by hand.

DELICATES
Developed to take good care of delicate items, this programme washes at a low temperrature in short time. An extended, in - depth rinse nourishes fabric fibres.

HYGIENE PLUS 59'
This washing programme is capable of reaching a temperature of 60°C for an extended period of time, combining the steam action with a powerful rinsing action for thoroughly clean and hygienic clothing. Recommended for cotton fabrics.

COTTON
This programme is suitable for washing coloured cotton garments at 40°C or for ensuring the highest degree of cleanliness for cotton resistant laundry washing at 90°C. The final spin is at maximum speed that ensures excellent dehydration effect.

20° COLD WASH
This innovative programme, allows you to wash different fabrics and colours together, such as cottons, synthetics and mixed fabrics at only 20°C and provides an excellent cleaning performance.

Note: The procedure to check the number of cycle that the machine has run.

Procedure: under "COTTON"programme, press "TEMPERATURE" and "SPEED" simutaneously, it will display the number of running cycle for 2 seconds, and then back to "COTTON" programme. The cumulativer running cycles will add after the programme ending. The running cycle will be displayed in hexademical. It is over 9999.

7-Consumption

Scan QR code on energy label for energy consumption information.
The actual energy consumption may differ from the declared one according to the local conditions.

Note: Auto Weight

The appliance is equipped with a loading recognition. At low loading, energy, water and washing time will be reduced automatically in some programmes. The display default time may vary depending on the load weight, involving the "ECO 40-60, Whites, Smart wash, Jeans, Synthetics, 20 ℃ Cold wash, Hand wash, Hygiene Plus59', Cotton and Delicate".

Indicative information(as per Commission Regulation (EU) 2019/2023):

Rated Capacity	Programme	(kg)	(HH:MM)	ENERG (kWh/cycle)	(L/cycle)	Max Temperature (℃)	Max Speed (RPM)	Residual Moisture (%)
7 kg (1400r)	ECO 40-60	8	3:38	0.655	54.0	30	1330	53.0
	ECO 40-60	4	2:48	0.380	35.0	28	1330	52.0
	ECO 40-60	2	2:38	0.200	30.0	25	1330	56.0
	20°C Cold Wash	8	1:18	0.320	75.0	20	1000	65.0
	Cotton 60 °C	8	1:23	1.800	75.0	57	1400	55.0
	Synthetics 40 °C	4	1:45	0.800	55.0	40	1200	37.0
	Rapid'30 °C	1	0:14	0.350	38.0	30	1000	65.0
8 kg (1400r)	ECO 40-60	8	3:38	0.655	54.0	30	1330	53.0
	ECO 40-60	4	2:48	0.380	35.0	28	1330	52.0
	ECO 40-60	2	2:38	0.200	30.0	25	1330	56.0
	20°C Cold Wash	8	1:18	0.320	75.0	20	1000	65.0
	Cotton 60 °C	8	1:23	1.800	75.0	57	1400	55.0
	Synthetics 40 °C	4	1:45	0.800	55.0	40	1200	37.0
	Rapid'30 °C	1	0:14	0.350	38.0	30	1000	65.0
9 kg (1400r)	ECO 40-60	9	3:48	0.610	56.0	28	1330	53.0
	ECO 40-60	4.5	2:52	0.390	40.0	26	1330	53.0
	ECO 40-60	2.5	2:38	0.220	32.0	25	1330	55.0
	ECO 40-60+Dry Leve1-2	6	8:40	3.730	90.0	25	1330	0
	ECO 40-60+Dry Leve1-2	3	5:40	2.100	50.0	25	1330	0
	20°C Cold Wash	9	0:59	0.350	85.0	20	1000	65.0
	Cotton 60°C	9	1:23	2.100	85.0	57	1400	55.0
	Synthetics 40°C	4.5	1:45	1.000	65.0	40	1200	37.0
	Rapid'30 °C	1	0:14	0.400	40.0	30	1000	65.0
10 kg (1400r)	ECO 40-60	10	3:58	0.698	64.0	30	1330	52.0
	ECO 40-60	5	2:58	0.410	43.0	26	1330	52.0
	ECO 40-60	2.5	2:48	0.220	32.0	25	1330	56.0
	ECO 40-60+Dry Leve1-2	6	8:40	3.730	90.0	25	1330	0
	ECO 40-60+Dry Leve1-2	3	5:40	2.100	50.0	25	1330	0
	20°C Cold Wash	10	0:59	0.350	85.0	20	1000	65.0
	Cotton 60°C	10	1:23	2.100	85.0	57	1400	55.0
	Synthetics 40°C	5	1:45	1.000	65.0	40	1200	37.0
	Rapid'30 °C	1	0:14	0.400	40.0	30	1000	65.0

The values given for programmes other than the ECO 40-60 programme and the wash and dry cycle are indicative only.

8.1 Power supply

Connect the washing machine to a power supply (220V to 240V~/50Hz; Fig. 8-1). Please also refer to section INSTALLATION (see P10).

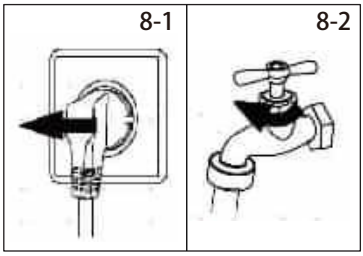

8.2 Water connection

- Before connecting check the cleanliness and clarity of the water inlet.
- Turn on the tap (Fig.8-2).

Note: Tightness

Before using, check for leakage in the joints between the tap and the inlet hose by turning on the tap.

8.3 Preparing laundry

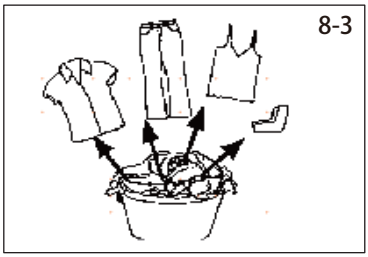

- Sort out clothes according to fabric (cotton,synthetics, wool or silk etc.) and how dirty they are (Fig.8-3). Pay attention to the care labelling of washing labels.
- Separate white clothes from coloured ones. Wash coloured textiles first by hand to check if they fade or run.
- Empty pockets (keys, coins, etc.) and remove harder decorative objects (e.g. brooches).
- Garments without hems, delicates and finely woven textile such as fine curtains are to be put into a wash bag to care for this delicate laundry (hand or dry cleaning would be better).
- Close zippers, velco fastener and hooks, make sure the buttons are sewn on tightly.
- Place sensitive items like laundry without firm hem, delicate underwear (Dessous) and small items such as socks, belts, bras, etc. in a wash bag.
- Unfold large pieces of fabric such as bed sheets, bedspreads etc.
- Turn jeans and printed, decorated or color intensive textiles inside out; wash separately as much as possible.

CAUTION!

Non-textile, as well as small, loose or sharp-edged items may cause malfunctions and damage of clothes and appliance.

Care chart

Washing					
	Washable up to 95°C normal process		Washable up to 60°C normal process		Washable up to 60°C mild process
	Washable up to 40°C normal process		Washable up to 40°C mild process		Washable up to 40°C very mild process
	Washable up to 30°C normal process		Washable up to 30°C mild process		Washable up to 30°C very mild process
	Wash by hand max. 40°C		Do not wash		
Bleaching					
	Any bleaching allowed		Only oxygen/ non-chlorine		Do not bleach
Drying					
	Tumble drying possible normal temperature		Tumble drying possible lower temperature		Do not tumble dry
	Line drying		Flat drying		
Ironing					
	Iron at a maximum temperature up to 200 °C		Iron at a medial temperature up to 150°C		Iron at a low temperature up to 110 °C; without steam (steam ironing may cause irreversible damage)
	Do not iron				
Professional Textile Care					
	Dry cleaning in tetra-chloroethene		Dry cleaning in hydrocarbons		Do not dry clean
	Professional wet clean		Do not professional wet clean		

8.4 Loading the appliance

- ▶ Put in the laundry piece by piece.
- ▶ Don't overload. Note the different maximum load according to programmes! Rule of thumb for maximum load: Keep six inches between load and drum top.
- ▶ Close the door carefully. Make sure that no pieces of laundry are pinched.

Note: Auto Weight

The display default time may vary depending on the load weight, involving the " ECO 40-60, Whites, Smart wash, Jeans, Synthetics, 20 ℃ Cold wash, Hand wash, Hygiene Plus59', Cotton and Delicate".

8.5 Selecting detergent

- Washing efficiency and performance is determined by used detergent quality.
- Use only machine wash approved detergent.
- If needed use specific detergents, e.g for synthetic and woolen fabric.
- Do not use dry cleaning agents such as trichloroethylene and similar products.

Choose the best detergent

Programme	Kind of detergent				
	Universal	Colour	Delicate	Special	Softener
ECO 40-60	√	√	-	-	√
WHITES	√P	√	-	-	√
COTTON	-	-	-	-	-
WOOL	-	-	-	-	-
SYNTHETICS	-	√	-	-	√
DRUM CLEAN	-	-	-	√	-
RINSE	-	-	-	-	√
DRAIN&SPIN	-	-	-	-	-
STEAM REFRESH	-	-	-	-	-
RAPID WASH	L	√ L	-	-	√
SPECIAL 39'	√	√ L	-	-	√
HAND WASH	-	-	√	√	√
DELICATES	-	-	√	√	√
HYGIENE PLUS 59'	√P	√	-	-	√
COTTON	√	√	-	-	√
20° COLD WASH	√	√	-	-	√

L = gel-/liquid detergent P = powder detergent O = no

√ =Reconommmended - =Not recommended

If using liquid detergent, it is not recommended to activate the time delay.

We recomment by using:

- Laundry powder: 20°C to 90°C* (best use: 40-60°C)
- Color detergent: 20°C to 60°C (best use: 30-60°C)
- Wool/delicate detergent: 20°C to 30°C (best use: 20-30°C)

* Choose 90 °C wash temperature only for special hygienic requirements.
* If you choose the water temperature 60°C or above, we would like to advise you to use less detergent.
* It is better to use less or free detergent powder.
* Suggested detergent type on remote control depends on the program choosen on APP.

8-4

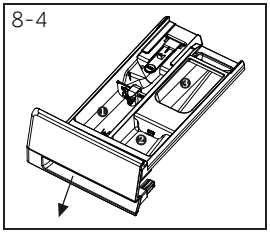

8.6 Adding detergent

1. Slide out the detergent drawer.
2. Put the required chemicals into corresponding compartments (Fig. 8-4).
3. Push back the drawer gently.

Note:

- Remove detergent residues before next wash cycle from the detergent drawer.
- Do not overuse detergent or softener.
- Please follow the instruction on the detergent package.
- Always fill the detergent just before the beginning of the wash cycle.
- Concentrated liquid detergent should be diluted before adding.
- Do not use liquid detergent if function "Delay" is selected.
- Carefully choose the programme settings according to the care symbols on all laundry labels and according to the programme table.

8-5

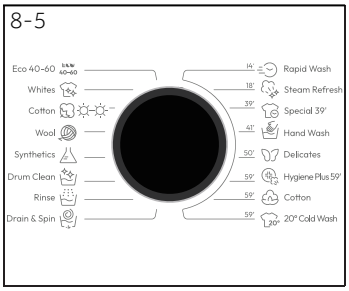

8.7 Select a programme

To get the best washing results, select a programme which fits the degree of dirty and laundry type.
Turn the programme knob (Fig. 8-5) to select the right programme. The display will show the selected programme name.

Note: Odour removal

Before first use we recommend to run the programme " Drum Clean " to remove possible corruptive residues.Please don't put any detergent or special machine cleaner in washing detergent compartment (2).

8-6

8.8 Add individual selections

Select required options and settings (Fig. 8-6); refer to Control Panel.

8.9 Start wash programme

Touch "Start/Pause" button (Fig.8-7) to start.
Appliance operates according to present settings.
Changes are only possible by cancelling the programme.

8.10 Interrupt / cancel wash programme

To interrupt a running programme,press "Start/Pause" , the LED above the button is flashing. Press it again to resume operation.

To cancel a running programme and all its individual settings:

1. Touch "Start/Pause" button to interrupt the running programme.
2. Turn the knob to the programme DRAIN & SPIN and select" 0 " to drain the water.
3. After closing the programm to restart the appliance, select a new programme and start it.

8.11 After washing

Note: Door lock

- ▶ For safety reasons the door is locked partially during the washing cycle. It is only possible to open the door at the end of the programme or after the programme was cancelled correctly (see description above).
- ▶ In case of high water level, high water temperature and during spinning. it is not possible to open the door; Lock is displayed.

1. At programme cycle" End " is displayed.
2. The appliance switches off automatically.
3. Take it out carefully to prevent more wrinkling.
4. Turn off the water supply.
5. Unplug the power cord.
6. Open the door to prevent formation of moisture and odours. Let it open while not used.

Note: Standby-mode / energy-saving mode

The switches on appliance will go into standby-mode if it will not be activated within 2 minutes before starting the programme or at the end of programme. The display switches off. This save energy.

8.12 Activate or deactivate the buzzer

The acoustic signal can be deselected if necessary:

1. In standby-mode, under any program, press the " ◎ " + " 🧺 " buttons at the same time for 5S, the buzzer will be turned off , the screen shows" bEEP OFF". Press the two button simutaneously again for 5S, the screen shows"bEEP on".

9-hOn App

9.1 General Information

This appliance is equipped with Wi-Fi technology for remote control via the hOn App.

WARNING!

Follow the safety precautions indicated in this manual even when using the appliance through the hOn App. Adhering to these instructions is essential for safe use.

9.2 Requirements

1. Wi-Fi Network: A router compatible with 802.11b/g/n and 2.4 GHz band is required. Networks operating at 5 GHz and public networks are not supported. The network name (SSID) must be between 1 and 31 characters, and the password between 8 and 64 characters. Encryption options include open, WPA-PSK, and WPA2-PSK.
2. Compatible Devices: The App is available for Android, iOS, and Huawei devices, on both tablets and smartphones.
3. Positioning: Install the appliance in an area with a strong Wi-Fi signal.

Wi-Fi Technical Specifications:

- Frequency: 2400 MHz - 2483.5 MHz
- Max Power: 20 dBM
- Standard: IEEE802.11b/g/n & Bluetooth® Low Energy v4.2[1]

9.3 Download and installation of hOn App

Download the App by scanning the QR code below or visiting *go.haier-europe.com/download-app.*

Download the hOn App

Download on the App Store

ANDROID APP ON Google play

EXPLORE IT ON HUAWEI AppGallery

Note: Registration

Creating a profile (sign up) is only required on first use or if the account has been deleted/disabled. For subsequent uses, simply log in with your mail and password. Use DEMO mode in the app to explore the Wi-Fi features.

9.4 Appliance pairing (hOn App)

Note: The home network must be set to 2.4 GHz; networks operating at 5 GHz are not supported. Ensure your smartphone is connected to the same 2.4 GHz Wi-Fi network you want to use to configure the appliance.

[1] The Bluetooth® word mark and logos are registered trademarks owned by Bluetooth SIG, Inc., and any use of such marks by Candy Hoover Group Srl is under license. Other trademarks and trade names belong to their respective owners.

1.Open the hOn App, create a new profile (or log in if you already have one).
2.Tap "Add Appliance" and follow the on-screen instructions on your smartphone to complete the setup.

9.5 Remote Control activation

1.Ensure the router is powered on and connected to the Internet.
2.Load the laundry and close the door.
3.Turn on the appliance.
4.Short press the button. The door will lock.
5.Start the cycle through the App. The control panel will be disabled, except for the "POWER" and "START/PAUSE" buttons. Only the child lock will be available during the program.
6.Remote control can also be activated during the cycle by short pressing the button.

Note: Remote Control expiration

You can send a command from the App up to 24 hours after Remote Control is enabled.

9.6 To disable Remote Control

1.During a cycle, you can deactivate Remote Control by short pressing the button; the cycle will continue. You can view the cycle status in the App but won't be able to send commands (e.g., stop/pause).
2.If safety conditions permit, the door can be opened.
3.To resume remote control through the App, make sure the door is closed, then short press the button again.

9.7 End of cycle with Remote Control

1.At the end of the cycle, the door unlocks, and the Remote Control is deactivated.
2.After 2 minutes the appliance will automatically power off.

9.8 Turning Off Wi-Fi Module and Clearing Network Credentials

To delete the saved Wi-Fi network information and turn off the Wi-Fi module:
1.Power on the appliance.
2.Without starting any cycle, press and hold the button for 5 seconds until "rESt"appears.
3.Press and hold the button for another 5 seconds until "donE" appears.
4.The configuration information will be deleted. Select a program or turn off the appliance to exit.
5.To reconfigure, remove the appliance from the hOn App and start a new pairing procedure.
Note: Use this procedure only if you intend to sell the appliance.

10-Care and cleaning

10.1 Cleaning the detergent drawer

Take care and check there are no detergent residues.
Clean the drawer regularly (Fig. 10-1) :

1. Pull out the drawer until it stops.
2. Press the release button and remove the drawer.
3. Flush the drawer with water until it is clean and insert the drawer back in the appliance.

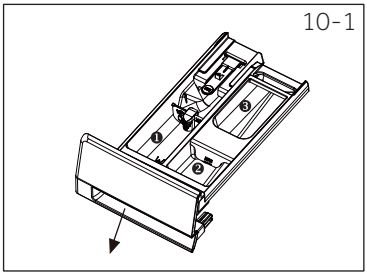

10.2 Cleaning the machine

- ▶ Unplug the machine during cleaning and maintenance.
- ▶ Use a soft cloth with soap liquid to clean the machine case (Fig.10-2) and rubber components.
- ▶ Do not use organic chemicals or corrosive solvents.

10.3 Water inlet valve and inlet valve filter

To prevent blockage of water supply by solid substances like lime clean regularly the inlet valve filter.

- ▶ Unplug the power cord and turn off the wate supply.
- ▶ Unscrew the water inlet hose at the back (Fig.10-3) of the appliance as well as on the tap.
- ▶ Flush the filter with water and a brush (Fig. 10-4).
- ▶ Insert the filter and install the inlet hose.
- ▶ Turn on the tap to see if it leaks.

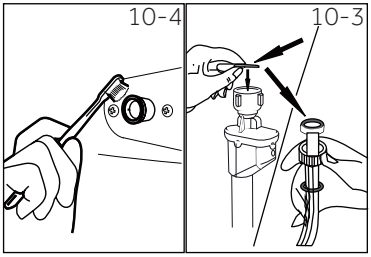

10.4 Cleaning the drum

- ▶ Remove accidental washed items, especially metal parts such as pins, coins, etc. from the drum (Fig. 10-5) because they cause rust stains and damage.
- ▶ Use a non-chloride cleaner for removing rust stains. Observe the warnings on the cleaning agent manufacturer.
- ▶ Do not use any hard objects or steel wool for cleaning.

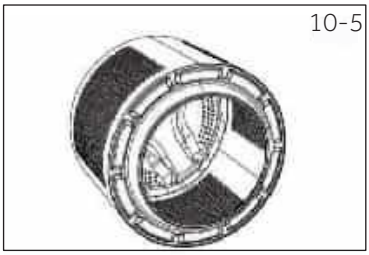

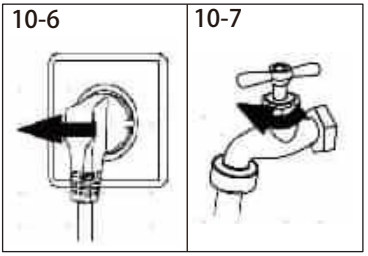

10.5 Long periods of disuse

If the appliance is left idle for a longer period:

1. Pull out the electrical plug (Fig. 1 0 -6).
2. Turn off water supply (Fig. 1 0 -7).
3. Open the door to prevent formation of moisture and odours. Leave the door open when not in use.

Before the next usage, carefully check the power cord, water inlet and drain hose carefully. Make sure that everything is properly installed and without leakage.

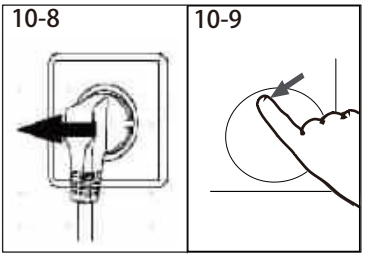

10.6 Pump filter

Clean the filter once a month and check the pump filter for instance if the appliance:

- ▶ Doesn't drain water.
- ▶ Doesn't spin.
- ▶ Creates unusual noise while running.

WARNING!

Scalding Risk! Water in the pump filter can be very hot! Before any action please ensure water has cooled down.

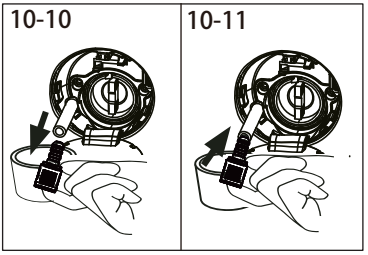

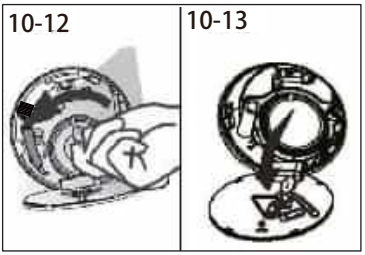

1.Turn off and unplug the machine (Fig.10-8).
2.Push and open the filter door(Fig.10-9).
3. Provide a flat container to catch the overflowing water (Fig.10-10).There could be big amounts.
4. Pull the drainhose out and hold its end above the container(Fig.10-10).
5. Taking the sealing plug out of the drainhose. (Fig.10-10).
6. After completing drainage, close the drainhose and push it back to the machine(Fig.10-11).
7. Unscrew and remove counter clockwise to to the pump filter (Fig.10-12).
8. Remove contaminants and dirt(Fig.10-13).

9. Clean carefully pump filter, e.g. using running water (Fig. 10-14).
10. Refix it thoroughly (Fig. 10-15).
11. Close the filter door.

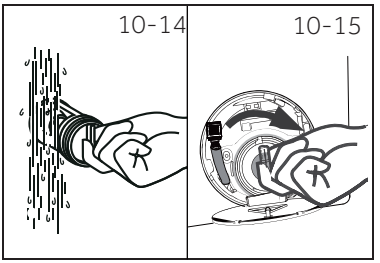

CAUTION!

- Pump filter sealing has to be clean and undamaged. If the lid is not fully tightened, water can escape.
- The filter must be in place, or it may lead to leakage.

11-Troubleshooting

Many occuring problems could be solved by yourself without specific expertise. In case of a problem please check all shown possibilities and follow below Instructions before you contact an after sales service. See CUSTOMER SERVICE.

WARNING!

- Before maintenance, deactivate the appliance and disconnect the mains plug from the mains socket.
- Electrical equipment should be serviced only by qualified electrical experts, because improper repairs can cause considerable consequential damages.
- A damaged power cable should only be replaced by the manufacturer, its service agent or similarly qualified persons in order to avoid a hazard.

11.1 Information codes

Following codes are displayed only for information referring to the washing cycle. No measures must be performed.

Code	Message
1:25	The remaining wash cycle time will be 1 hour and 25 minutes.
6:30	The remaining delay time will be 6 hours and 30 minutes.
cLoH	Function child lock is activated.
End	The washing cycle is finished.The appliance shuts off automatically.
LocH	Door is closed because of high water level,high water temperature or spinning cycle.
nd	Model has not been selected.

11.2 Troubleshooting with display code

Problem	Cause	Solution
CLR FLTR	• Drainage error, water is not fully drained within 6 minutes.	• Clean pump filter • Check drain hose installation.
E2	• Lock error.	• Shut the door properly.
E4	• Water level not reached, drain hose is self-syphoning.	• Make sure that tap is fully opened and water pressure is normal. • Check the inlet hose installation.
E8	• Water protective level error.	• Contact the After sales service.
F9	• Logic: The communication between the drying tempera-ture sensor is abnormal • Cause: Drying temp sensor failure	• Check whether the wire and terminal are well connected. • Check the resistance of dry temperature sensor.
E9	• The load is attached to the cylinder wall.	• Open the door,shake off the load cloth and put it back into the inner cylinder to start the machine.
E5	• Drainage error.Water is not fully drained within 1 minutes.	• Clean pump filter. • Check drain hose installation.
Fd	• Dry heating communication error.	• Contact the after sales service.
Fb	• Water overflowed abnormally.	• Contact the after sales service.

Problem	Cause	Solution
F3	• Temperature sensor error.	• Contact the After sales service.
F4	• Heating error.	• Contact the After sales service.
F7	• Motor error.	• Contact the After sales service.
FA	• Water level sensor error.	• Contact the After sales service.
FC0,FC1 or FC2	• Abnormal communication error.	• Contact the After sales service.
Eb	• Clothes jamming alarm.	• Pause operating, open the door and place garments again before restarting.

11.3 Troubleshooting without display code

Problem	Cause	Solution
Washing machine fails to operate.	• Programme is not yet started. • Door is not properly closed. • Machine has not been switched on. • Power failure. • Child lock is activated.	• Check programme and start it. • Close the door properly. • Switch the machine on. • Check power supply. • Deactivate child lock.
Washing machine will not be filled with water.	• No water. • Inlet hose is kinked. • Inlet hose filter is blocked. • Water pressure is less than 0.03 MPa. • Door is not properly closed. • Water supply failure.	• Check water tap. • Check inlet hose. • Unblock inlet hose filter. • Check water pressure. • Close the door properly. • Ensure the water supply.
Machine is draining while being filled.	• Height of drain hose is below 80 cm. • Drain hose end could reach into water.	• Make sure that drain hose is properly installed. • Make sure the drain hose is not in water.
Drainage failure.	• Drain hose is blocked. • Pump filter is blocked. • Drain hose end is higher than 100 cm above floor level.	• Unblock drain hose. • Clean pump filter. • Make sure that drain hose is properly installed.
Strong vibration while spinning.	• Not all transportation bolts have been removed. • Appliance has no solid position. • Machine load is not correct.	• Remove all transportation bolts. • Ensure solid ground and a levelled position. • Check load weight and balance.
Operation stops before completing wash cycle.	• Water or electric failure.	• Check power and water supply.
Operation stops for a period of time.	• Appliance displays error code. • Problem due to load pattern. • Programme performs soaking cycle.	• Consider display codes. • Reduce or adjust load. • Cancel programme and restart.

Problem	Cause	Solution
Excessive foam floats drum and/or detergent drawer.	• Detergent is not appropriate. • Excessive use of detergent.	• Check detergent recommendat-ions. • Reduce amount of detergent.
Automatic adjustment of washing time.	• Washing programme duration will be adjusted.	• This is normal and doesn't affect functionality.
Spinning fails.	• Unbalance of laundry.	• Check machine load and laundry and run a spinning programme again.
Unsatisfactory washing result.	• Degree of pollution does not agree with selected programme • Detergent quantity was not sufficie-nt. • Maximum load has been exceeded. • Laundry was unevenly distributed in the drum.	• Select an other programme. • Choose the detergent acc. to the degree of pollution and according to manufacture • Reduce loading. • Loose the laundry.
Washing powder residues are on the laundry.	• Insoluble particles of detergent can remain as white spots on the laundry.	• Perform extra rinse. • Try to brush the points from the dry laundry. • Choose an other detergent.
Laundry has grey patches.	• Caused by fats such as oils, creams or ointments.	• Pretreat the laundry with a special cleaner.

Note: Foam formation

If too much foam is inspected during spin cycle, motor stops and drain pump will be activated for 90 seconds. If that elimination of foam fails up to 3 times, programme ends without spinning.

Should the error messages reappear even after the taken measures, switch off the appliance, disconnect the power supply and contact the customer service.

11.4 In case of power failure

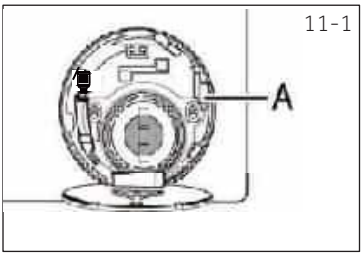

11-1

The current programme and its setting will be saved. When power supply is restored, operation will be resumed.
If a power failure cuts an operating wash programme, door opening is mechanically blocked. To get out any laundry water level should not be seen in the glassy porthole of the door. - Danger of burns! Water level has to be lowered as described in "Pump filter". Not till then pull lever (A) beneath service flap (Fig. 11-1) until door is unlocked by a gentle click. Afterwards refix all parts.

When the washing machine in a safe state (under the water level below the window along a certain distance, barrel temperature below 55°C, the inner barrel did not turn), may unlock the doors of the machine operation.

12.1 Additional technical data

	8+5kg	9+6kg	10+6kg
Voltage in V	220-240 V~/50Hz		
Current in A	10		
Max power in W	1950		
Water pressure in MPa	0.03≤P <1		
Washing max kg	8	9	10
Drying max kg	5	6	6

12.2 Product dimensions

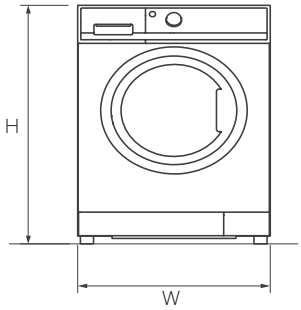

FRONT VIEW

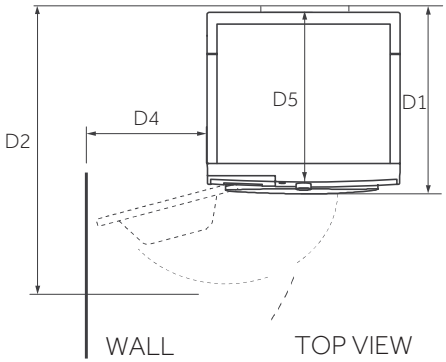

TOP VIEW

PRODUCT DIMENSIONS	8+5kg	9+6kg	10+6kg
H Overall height of product mm	850	850	850
W Overall width of product mm	595	595	595
D5 overall depth of product (To main control board size) mm	491	559	559
D1 Overall depth of product mm	533	601	601
D2 Depth of door open mm	1015	1084	1084
D4 Minimum door clearance to adjacent wall mm	300	300	300

Note:

The exact height of your washer is dependent on how far the feet are extended from the base of the machine. The space where you install your washer needs to be at least 40mm wider and 20mm deeper than its dimensions.

12.3 Standards and Directives CE

This product meets the requirements of applicable EC directives with the corresponding harmonised standards, which provide for CE marking.

13-Customer service

We recommend our Hoover Customer Service and the use of original spare parts.
If you have a problem with your appliance, please first check section 11-Troubleshooting.

If you cannot find a solution there, please contact:

- your local dealer.
- the Assistence Area on the Hoover website where you can find information on Warranties, Accessories and Spare Parts and Contact numbers.

To contact our Service, ensure that you have the following data available.

Each product is identified by a unique code, also called the "serial number", printed on a sticker. This can be found inside the door opening.

Model _____ Serial No. _____

Also check the Warranty Card supplied with the product in case of warranty.

It is always recommended to use original spare parts, that are available at our Authorised Customer Service Centres.

Warranty
The product is guaranteed under the terms and conditions stated on the certificate included with the product. The certificate has to be stored so as to be shown to the Authorized Customer Service Centre in case of need. You can also check the warranty conditions on our web site. To obtain assistance, please fill in the form online or contact us at the number indicated on the support page of our website.

The standard manufacturer warranty covers faults caused by electrical or mechanical faults in the product due to an act or omission of the manufacturer. If a fault is found to be caused by factors outside the product supplied, missuse or as a result of the instructions on use not being followed, a charge may be applied.

The manufacturer declines all responsibility for any printing errors in the booklet included with this product. Moreover, it also reserves the right to make any changes deemed useful to its products without changing their essential characteristics.

*For more information please refer to www.haier-europe.com

PSTI STATEMENT OF COMPLIANCE

No. WSH240044PSTI rev. A-OEM

Product

Description:	**Washing machine with Wi-Fi interface and hOn app**
Brand:	**as per Annex**
Model:	**as per Annex**
Part number:	**as per Annex**

Manufacturer

Name:	**Candy Hoover Group S.r.l.**
Address:	**Via Comolli 16, 20861 Brugherio (MB), ITALY**
Website:	https://corporate.haier-europe.com/

This statement of compliance is prepared by the manufacturer of the product.

In the opinion of the manufacturer, it has complied with the deemed compliance conditions in Schedule 2 of "Product Security and Telecommunications Infrastructure (Security Requirements for Relevant Connectable Products) Regulations 2023":

– provisions 5.1-1 and 5.1-2 of ETSI EN 303 645 V2.1.1 (2020-06) for *Passwords*;

– provision 5.2-1 of ETSI EN 303 645 V2.1.1 (2020-06) for *Information on how to report security issues*;

– provision 5.3-13 of ETSI EN 303 645 V2.1.1 (2020-06) for *Information on minimum security update periods*.

The defined support period is minimum of 2 years from the product purchase.

Any unauthorized modification of the product voids this declaration.

Signed for and on behalf of Candy Hoover Group S.r.l.

Brugherio, March 25th 2024

Andrea Pandolfi

Andrea Pandolfi
Washing R&D Director

0020509288DXM